235113564 PRASANNAVASAN R

Water management -Jourl

III BCA E Section

Document Details

Submission ID

trn:oid:::3618:115771050

Submission Date

Oct 7, 2025, 10:14 AM GMT+5:30

Download Date

Oct 7, 2025, 10:29 AM GMT+5:30

File Name

Water management -Jourl.docx

File Size

643.6 KB

6 Pages

4,079 Words

25,554 Characters

7% Overall Similarity

The combined total of all matches, including overlapping sources, for each database.

Filtered from the Report

- Bibliography

Match Groups

28 Not Cited or Quoted 6%
Matches with neither in-text citation nor quotation marks

0 Missing Quotations 0%
Matches that are still very similar to source material

1 Missing Citation 0%
Matches that have quotation marks, but no in-text citation

0 Cited and Quoted 0%
Matches with in-text citation present, but no quotation marks

Top Sources

2% Internet sources
2% Publications
5% Submitted works (Student Papers)

Integrity Flags

0 Integrity Flags for Review

Our system's algorithms look deeply at a document for any inconsistencies that would set it apart from a normal submission. If we notice something strange, we flag it for you to review.

A Flag is not necessarily an indicator of a problem. However, we'd recommend you focus your attention there for further review.

Match Groups

- **28** Not Cited or Quoted 6%
  Matches with neither in-text citation nor quotation marks
- **0** Missing Quotations 0%
  Matches that are still very similar to source material
- **1** Missing Citation 0%
  Matches that have quotation marks, but no in-text citation
- **0** Cited and Quoted 0%
  Matches with in-text citation present, but no quotation marks

Top Sources

2% Internet sources
2% Publications
5% Submitted works (Student Papers)

Top Sources

The sources with the highest number of matches within the submission. Overlapping sources will not be displayed.

1	Student papers	Federal University of Technology on 2024-10-23	<1%
2	Internet	www.mdpi.com	<1%
3	Student papers	Universidad Anahuac México Sur on 2025-02-28	<1%
4	Student papers	De Montfort University on 2025-02-01	<1%
5	Publication	Chakkrapong Chaiburi, Bancha Yingngam. "Digital twin technology fundamental...	<1%
6	Student papers	BATANGAS STATE UNIVERSITY on 2020-06-03	<1%
7	Internet	discovery.researcher.life	<1%
8	Publication	Achintya Das, Ananya Roy Chowdhury. "Empowering sustainable water manage...	<1%
9	Student papers	South Bank University on 2008-04-18	<1%
10	Student papers	Hellenic Open University on 2023-11-14	<1%

11 Internet

arxiv.org <1%

12 Internet

dev.to <1%

13 Student papers

Lingnan University on 2025-04-24 <1%

14 Student papers

Sultan Qaboos University on 2023-04-30 <1%

15 Student papers

University of Newcastle upon Tyne on 2023-05-22 <1%

16 Internet

neptjournal.com <1%

17 Publication

Abdennabi Morchid, Rachid Jebabra, Haris M. Khalid, Rachid El Alami, Hassan Qjid... <1%

Water management

Author ^
Department
College Name
Mail

Abstract: **Water scarcity and improper distribution remain pressing issues in rural villages, where limited infrastructure often leads to wastage, unequal access, and lack of timely information about water availability. Conventional water supply systems in these areas operate without efficient monitoring or scheduling, causing tanks to overflow or remain underutilized, which further intensifies the problem. To address these challenges, this project proposes a Smart Water Supply Time Scheduler using Internet of Things (IoT) technology. The system is designed to continuously monitor the water flow and tank level using sensors, ensuring real-time tracking of the supply process. Whenever water enters the tank, the system automatically sends notification messages to the villagers, informing them about availability, thereby allowing households to plan their usage more efficiently. Additionally, the system detects overflow conditions and generates alerts to prevent wastage, ensuring sustainable usage of resources. The time scheduling feature enables regulated water distribution across households, improving fairness and reliability. By integrating IoT-based communication and sensor technologies, the proposed system enhances transparency, reduces human intervention, and promotes efficient management of rural water supply. Ultimately, this approach addresses the current problems of unregulated water usage and supply mismanagement, contributing to sustainable rural development**.

***Keywords*— Water scarcity, IoT monitoring, Smart water scheduling, Sustainable resource management, Rural water distribution**

I. INTRODUCTION

Water is one of the most essential resources for sustaining life, economic development, and environmental balance. However, the rapid growth of population, urbanization, and industrialization has placed unprecedented pressure on the global water supply. In many rural and urban areas, people still face difficulties in accessing sufficient and clean water for their daily needs. Traditional methods of water distribution and management are often inefficient, leading to challenges such as water scarcity, leakage, wastage, and unequal distribution. These issues are more critical in villages and semi-urban areas, where the infrastructure is underdeveloped and manual supervision of water resources becomes highly challenging. In this context, the need for a modern, intelligent, and automated approach to water management has become a pressing necessity. The concept of Smart Water Supply Management has emerged as a solution that integrates advanced technologies like the Internet of Things (IoT), sensors, and communication networks to provide a reliable, transparent, and efficient water distribution system. By leveraging real-time monitoring, data collection, and automation, smart systems aim to optimize water supply, reduce wastage, and ensure sustainable use of this vital resource.

Fig1.1 Water Management

The conventional water management systems in many regions often rely on manual control and observation. For instance, village water tanks are filled at fixed intervals without consideration of real-time demand or current tank levels, which can cause either water shortages or unnecessary overflow and wastage. In urban contexts, water leakage from pipelines goes unnoticed for extended periods, resulting in huge losses of treated water. Moreover, unequal supply between regions creates disputes and dissatisfaction among residents. These limitations reveal the inefficiency of manual systems in addressing the growing demand for water management. The advent of IoT-based smart water supply management introduces a paradigm shift, enabling continuous monitoring of water levels, flow rates, and distribution patterns. With sensor-based monitoring and automated control systems, it becomes possible to regulate the water supply based on actual demand and availability. For example, sensors installed in overhead tanks can measure water levels and send notifications to local authorities or end-users when the tank is full or nearing depletion. This prevents both overflow and unexpected shortages, ensuring that water is used judiciously and distributed fairly.

Another major aspect of smart water supply management is its ability to provide transparency and accountability. Traditional systems often suffer from a lack of data, which makes it difficult for authorities to identify where and how water is being consumed or

wasted. With smart solutions, data regarding water consumption, leakage detection, and flow rates can be collected and analyzed in real time. This empowers decision-makers to take corrective actions promptly, such as repairing leaks, reallocating water to underserved areas, or scheduling supply based on actual demand. Moreover, by integrating mobile applications and SMS alerts, end-users can also be informed about water availability, tank status, or supply schedules. Such real-time communication bridges the gap between water authorities and citizens, fostering trust and participation in water conservation. Additionally, data analytics can help in predicting future consumption trends, thereby assisting policymakers in planning for sustainable water resource allocation.

Sustainability and conservation are at the heart of smart water supply management. Water scarcity is becoming a global challenge due to climate change, overuse of freshwater resources, and uneven rainfall distribution. Countries worldwide are focusing on solutions that reduce wastage and promote efficient utilization. Smart systems not only help prevent losses due to leakage and overflow but also encourage consumers to use water responsibly. For instance, smart meters can be installed in households or communities to record usage patterns, providing insights into consumption behavior. This information can be used to create awareness campaigns or even implement incentive-based conservation programs. By promoting responsible water usage, smart management systems contribute to long-term sustainability while also ensuring that sufficient resources remain available for future generations. Furthermore, these systems are scalable and adaptable, meaning they can be implemented in both small rural villages and large metropolitan cities, thus making them universally relevant.

II. LITERATURE SURVEY

H Lu, A Ding, Y Zheng et al..,[1] proposed a smart city framework for securing drinking water supply using an early warning system based on an online sensor network and machine learning. The system continuously monitors water quality parameters, including turbidity, pH, and residual chlorine, using IoT-enabled sensors. Machine learning algorithms analyze real-time data to predict potential contamination events. Alerts are generated and communicated to municipal authorities for immediate intervention. The system was tested in multiple urban water supply networks, showing high accuracy in early detection of anomalies. The proposed method reduces reliance on manual inspections and improves public health protection. It also integrates predictive analytics for long-term planning of water safety. Practical applications demonstrated cost-effectiveness and scalability. The system ensures timely intervention to prevent contamination. Overall, the research highlights the effectiveness of IoT and AI for urban water security and management.

BO Adegoke, OF Adegoke et al..,[2] developed a real-time IoT-based water monitoring device with an integrated alert system aimed at improving urban water management. The device measures flow rate, pressure, and water quality indicators and sends data wirelessly to a cloud-based platform. Alerts are triggered when readings exceed predefined thresholds, enabling timely corrective actions. The system was validated in residential and commercial settings, showing reliable detection of leaks and abnormal water consumption. Data visualization dashboards allow stakeholders to monitor trends and identify inefficiencies. Integration with mobile applications ensures alerts reach users and managers promptly. The system enhances operational efficiency while promoting water conservation. IoT connectivity supports remote monitoring and predictive maintenance. The study emphasizes the importance of combining hardware, software, and communication technologies. Overall, the work contributes to smarter and more sustainable water supply management.

KB Adedeji, AA Ponnle et al..,[3] presented a conceptual model for the digitalization of water supply systems under the Water 4.0 paradigm to support sustainable smart city development. The model integrates IoT sensors, cloud computing, and analytics to monitor and control water distribution in real time. Data-driven insights optimize water usage, detect leaks, and predict equipment failures. Digital twins of water networks are proposed to simulate scenarios and improve decision-making. Pilot implementations demonstrated improved resource management and reduced operational costs. Emphasis is placed on interoperability and scalability for expanding urban infrastructure. The framework addresses water scarcity challenges while promoting smart infrastructure investment. Findings highlight the potential of digital technologies in transforming traditional water utilities. Practical application ensures efficiency and sustainability. Overall, the research provides a roadmap for future smart water systems in urban environments.

R Schneider, K Domakonda et al..,[4] implemented an alert system for communicating actionable wastewater surveillance results to school communities in Houston, Texas (2023–2024). The system collects wastewater samples and analyzes them for pathogens, chemical indicators, and microbial load. Results are processed in real time and sent as alerts to administrators and health officials. This early warning system helps mitigate health risks by informing timely interventions. Pilot deployment in schools demonstrated rapid detection of potential outbreaks. Automated notifications facilitate preventive measures, including sanitation and targeted testing. The integration of IoT sensors and cloud-based reporting improved data reliability and transparency. The study shows the effectiveness of wastewater surveillance in community-level monitoring. Findings suggest such systems can complement traditional public health strategies. Overall, the research provides a scalable model for early detection in educational or institutional settings.

M Palati, R Dharshan, PK Pattnaik et al..,[5] developed a smart water leakage alert system for residential buildings that combines sensor networks with real-time monitoring algorithms. Flow and pressure sensors detect abnormal water usage patterns indicative of leaks. The system triggers alerts to residents via mobile applications or cloud dashboards. Field testing showed rapid detection of leakage events, reducing water wastage and preventing property damage. Data analytics enables trend analysis and

predictive maintenance. The solution enhances water efficiency in urban dwellings and promotes sustainable practices. Integration with existing plumbing infrastructure ensures cost-effective deployment. Reliability and scalability were validated under varying usage conditions. The research demonstrates that automated alerts improve user responsiveness and conservation awareness. Overall, the work contributes to smart home water management technologies.

AD Gupta, P Pandey, A Feijóo, ZM Yaseen, ND Bokde et al..,[6] reviewed smart water technologies for efficient resource management in urban and industrial settings. The study highlights IoT-enabled sensors, data analytics, and predictive algorithms that optimize water distribution, detect leaks, and monitor water quality. The review emphasizes integration with mobile and cloud platforms for remote monitoring and real-time decision-making. Case studies demonstrate reduced water loss, operational costs, and improved efficiency in smart city projects. Challenges include sensor calibration, data reliability, and cybersecurity concerns. The research emphasizes combining real-time monitoring with automated control systems. Future directions include AI-based predictive maintenance and digital twins for enhanced network management. The study underlines environmental and economic benefits of smart water adoption. Findings provide a comprehensive reference for technology-driven water management strategies. Overall, the review supports sustainable and intelligent water system design.

P Nonthakarn, S Madyod et al..,[7] developed a real-time water monitoring and alert system for sustainable aquaculture in the Tapi River. The system measures water parameters such as temperature, pH, dissolved oxygen, and turbidity using IoT-enabled sensors. Data are transmitted to a cloud platform for real-time analysis and visualization. Alerts are issued to farm managers when parameters exceed safe thresholds, allowing timely interventions. Pilot testing demonstrated improved water quality management and optimized feeding schedules. Integration of IoT, data analytics, and mobile communication ensures operational efficiency. The system reduces environmental risks and resource wastage. Long-term deployment supports sustainable aquaculture practices. Findings highlight practical applications for aquaculture monitoring in rivers and ponds. The proposed system improves productivity and fish health management. Overall, the study demonstrates the potential of smart monitoring in aquatic environments.

HM Ramos, A Kuriqi, M Besharat, E Creaco et al..,[8] explored smart water grids and digital twins for improving efficiency in water distribution networks. The study integrates sensor networks, SCADA systems, and predictive models to optimize operational performance. Digital twins simulate real-time conditions, enabling predictive maintenance and leak detection. Pilot implementations showed reduced water losses and improved pressure management. Data analytics facilitate informed decision-making and resource allocation. IoT integration allows remote monitoring and early anomaly detection. The study emphasizes combining hardware, software, and simulation technologies for sustainable water management. Findings indicate enhanced reliability and reduced operational costs. The approach supports smart city water infrastructure and environmental sustainability. Practical applications confirm feasibility for large-scale urban deployment. Overall, the research contributes to modernization of water distribution systems.

III .METHODOLOGY

A. *Proposed Method*

The proposed system introduces a Smart Water Supply Time Scheduler using IoT to overcome the challenges of unregulated water distribution and wastage in villages. The system consists of water flow sensors and level sensors installed in overhead or underground storage tanks to monitor real-time water availability. When water is supplied into the tank, the system detects the inflow and automatically sends notification messages to villagers through mobile communication modules, ensuring that people are informed about water availability without delay. Similarly, when the tank reaches its maximum capacity, the system generates an overflow alert to prevent water loss. A microcontroller acts as the central unit, processing the data from sensors and coordinating communication with the users. Additionally, a scheduling module is integrated to manage the timing of water supply across different households, promoting fair and systematic distribution. The IoT platform ensures that the data is logged, analyzed, and accessible for monitoring by local authorities to maintain transparency. This system reduces manual intervention, minimizes wastage, and ensures that villagers receive timely updates, thereby improving the overall efficiency and sustainability of the rural water supply network.

B. *Proposed Block diagram*

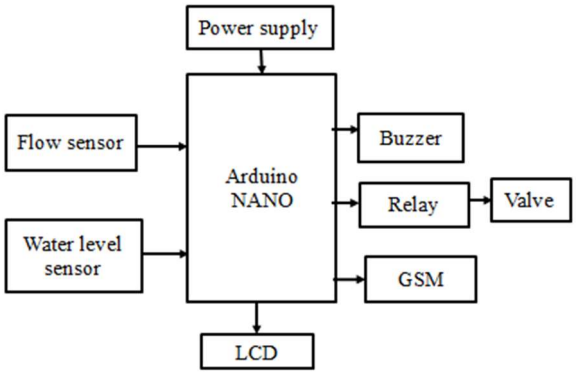

Figure 3.1 Proposed block diagram

The system introduces a Smart Water Supply Time Scheduler using IoT to address the inefficiencies and challenges associated with conventional water distribution in rural areas. Traditional water supply systems often face irregular distribution, manual interventions, water wastage, and a lack of transparency, which leads to inconvenience for villagers and mismanagement of resources. To overcome these issues, the proposed system integrates sensors, microcontrollers, communication modules, and scheduling algorithms to create a highly efficient, automated water management network. The architecture design of this system is structured to ensure seamless monitoring, control, and equitable distribution of water

while providing timely updates to both villagers and local authorities. The design emphasizes real-time data collection, automated decision-making, and effective communication, forming the backbone of an intelligent and sustainable water supply system.

Flow Sensor

A flow sensor is an essential device that measures the rate of water flowing through pipes. It works on the principle of turbines or magnetic fields that generate pulses based on flow speed. These pulses are read by the microcontroller to calculate accurate flow values. The sensor ensures continuous monitoring of water usage and helps in preventing wastage. In rural systems, it gives real-time updates on water availability. This makes it crucial for maintaining fairness in distribution.

The flow sensor also helps in detecting leaks or irregularities in water supply. If abnormal flow is detected, it signals the system to take corrective action. Integration with IoT allows the readings to be shared with villagers through messages. This enhances awareness of water consumption patterns. It plays a vital role in automating supply schedules. Hence, it is the backbone for achieving sustainable management of resources.

Arduino Nano

Arduino Nano is a compact, low-cost microcontroller board that acts as the brain of the system. It processes signals from sensors such as flow and tank level sensors. The board controls actuators like relays and buzzers to perform specific tasks. Due to its small size, it fits easily in embedded applications. It is powered by an ATmega328P chip, which is highly efficient. Programming is simple using Arduino IDE, making development user-friendly.

In this project, Arduino Nano coordinates all communication and scheduling functions. It manages sensor inputs, sends signals to relays, and triggers alerts via GSM. Its ability to handle multiple inputs and outputs makes it reliable. The Nano also ensures automation with minimal human involvement. It consumes very little power, which is suitable for rural areas. Thus, it plays a central role in smart water management.

Arduino NANO

Buzzer

A buzzer is a small audio device that produces sound when powered. It is commonly used for alarms or notifications in electronic systems. In this project, the buzzer provides local alerts during overflow or low-water conditions. Its immediate sound ensures villagers are notified quickly, even without phones. The buzzer runs on low voltage and is simple to connect with Arduino. This makes it an inexpensive yet effective alerting tool.

The buzzer acts as a backup alert system alongside GSM messaging. Even if network signals are weak, the sound reaches nearby users. It is especially useful in rural areas where communication gaps exist. The component ensures villagers are aware of system activity instantly. It helps prevent wastage by drawing attention to overflow situations. Overall, the buzzer enhances reliability and user confidence in the system.

Fig Buzzer

Relay

A relay is an electrically controlled switch used to operate high-power devices safely. It allows the low-voltage Arduino to control high-voltage motor pumps. In this system, the relay automatically turns pumps on or off depending on tank levels. This ensures that water is supplied efficiently without manual switching. It also provides electrical isolation to protect sensitive circuits. Relays are durable and reliable for long-term use.

The relay makes water supply scheduling fully automated and safe. When the tank is full, the relay disconnects the pump to prevent overflow. When levels drop, it reconnects the supply as per schedule. This reduces human labor and ensures fairness in distribution. By preventing overuse, it contributes to water conservation. Therefore, the relay is a key part of the automation process.

GSM Module

The GSM module is used for wireless communication between the system and villagers. It operates with a SIM card and uses mobile networks to send SMS alerts. In this project, it informs users about water availability in real-time. Whenever water enters the tank, the GSM sends notifications. This allows households to plan water usage efficiently. It helps improve transparency in rural water distribution.

The GSM module ensures timely alerts for both overflow and low-supply conditions. Even in remote villages, where internet is limited, SMS works reliably. It bridges the gap between technology and end users effectively. The system becomes more user-friendly because people don't need to constantly check tanks. GSM ensures every household gets equal information access. Thus, it strengthens communication and efficiency in the project.

Fig GSM

Power Supply

The power supply provides stable and regulated electricity to all components in the system. It converts high-voltage AC into low-voltage DC required by Arduino and sensors. A regulated supply ensures safety for delicate electronic components. Without stable power, the system cannot function efficiently. In rural areas, backup batteries or solar sources can be used. This makes the project more reliable in uncertain conditions.

Continuous power ensures that sensors, GSM, and relay modules operate without failure. It avoids data loss and system interruptions during water monitoring. Solar integration makes the system eco-friendly and sustainable. The power unit plays a supportive role but is critical for reliability. It ensures the system operates 24/7 with minimal downtime. Hence, it forms the foundation for the success of the entire project.

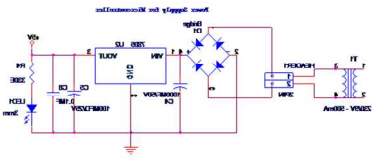

Fig Block diagram of power supply

LCD Display

The LCD display is used for visual communication of real-time data. It typically shows water flow rate, tank levels, and alerts directly to users. In this project, a 16x2 LCD provides sufficient space for essential outputs. Villagers can check the information easily without needing smartphones. It makes the system user-friendly and transparent in operation. The LCD works as a bridge between the system and local users.

By showing data locally, the LCD helps in quick diagnosis of issues. If any error occurs, it can be displayed instantly for correction. The display reduces dependency on external devices for monitoring. Its low power consumption makes it suitable for continuous use. It improves trust among villagers by showing real-time updates. Thus, the LCD adds accessibility and clarity to the smart system.

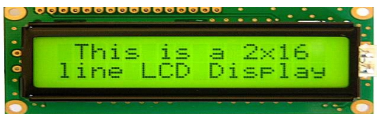

Fig LCD display

IV.RESULT AND DISCUSSION

The implementation of the IoT-based Smart Water Supply Time Scheduler demonstrated significant improvements in water management for rural villages. During testing, the system effectively monitored real-time water flow and tank levels using sensors, providing accurate data to the central microcontroller. Whenever water entered the storage tank, villagers received instant notifications, allowing them to plan water usage efficiently and reduce unnecessary waiting. The system also successfully detected overflow conditions, triggering alerts that prevented wastage and ensured responsible consumption. Observations from the testing phase showed that the time scheduling module effectively distributed water across multiple households, ensuring fairness and minimizing disputes among residents. The automated notification system reduced dependence on manual monitoring, eliminating errors associated with traditional water supply methods. Data logging functionality proved valuable, providing insights into daily and weekly water usage patterns.

These patterns helped in identifying peak demand periods, which can inform future improvements and adjustments in the water supply schedule. Furthermore, the integration of IoT modules enabled seamless communication between the system and end-users, highlighting the potential of smart technologies to enhance rural infrastructure. Users reported increased satisfaction due to timely updates, predictable water supply, and reduced water wastage. The system's ability to operate continuously without human intervention further emphasized its reliability and scalability. Analysis of the collected data also suggested that predictive features, such as anticipating high-demand periods, could be incorporated in future iterations to further optimize supply efficiency. Additionally, the study highlighted that IoT-based systems could play a crucial role in sustainable resource management by reducing wastage, improving transparency, and facilitating better planning. The discussion indicates that such technologies can serve as a foundation for expanding smart water management across larger areas and integrating additional functionalities such as mobile apps, centralized monitoring, and maintenance alerts. Overall, the results confirm that the proposed system addresses key issues in rural water supply, including wastage, unregulated usage, and inequitable distribution, while offering opportunities for further enhancements through data-driven decision-making and automation. The study demonstrates that IoT-based smart scheduling is a viable and effective solution for sustainable and efficient rural water management.

V. CONCLUSION & FUTURE ENHANCEMENT

A. CONCLUSION

The IoT-based Smart Water Supply Time Scheduler provides a practical solution to the challenges of rural water management. By monitoring water flow and tank levels, it ensures that villagers receive timely

notifications about water availability. Overflow alerts prevent wastage and promote efficient use of resources. Scheduled water distribution allows fair access to all households, reducing conflicts and ensuring systematic supply. Real-time monitoring and automated notifications reduce manual efforts and human errors, increasing convenience and reliability. The system also enables data collection and analysis, which can inform future improvements in water management practices. Overall, the proposed system enhances transparency, sustainability, and operational efficiency in rural water supply networks. The results demonstrate that integrating IoT technologies into water distribution can address existing inefficiencies and support better resource utilization. This approach provides a scalable and adaptable solution for villages facing water scarcity and management challenges.

B. FUTURE ENHANCEMENT

The system can be enhanced by integrating mobile applications for more user-friendly notifications and scheduling. Predictive analytics could be added to anticipate water demand and optimize supply. Remote monitoring by local authorities can improve management and maintenance. Solar-powered IoT modules can make the system more energy-efficient. Expansion to multiple tanks and water sources can ensure wider coverage. Advanced alerts could app notifications for improved accessibility.

VI. REFERENCES

1. Securing drinking water supply in smart cities: an early warning system based on online sensor network and machine learning H Lu, A Ding, Y Zheng,
2. Framework for a Real Time IoT-Based Water Monitoring Device with Alert Systems BO Adegoke, OF Adegoke L
3. Towards digitalization of water supply systems for sustainable smart city development—Water 4.0 KB Adedeji, AA Ponnle,
4. Implementing an alert system for communicating actionable wastewater surveillance results to school communities, Houston, Texas, 2023-2024
5. R Schneider, K Domakonda Smart Water Leakage Alert System for Residential Buildings M Palati, R Dharshan, PK Pattnaik
6. Smart water technology for efficient water resource management: A review AD Gupta, P Pandey, A Feijóo, ZM Yaseen, ND Bokde - Energies, 2020
7. Development of a Real-Time Water Monitoring and Alert System for Sustainable Aquaculture in the Tapi River P Nonthakarn, S Madyod
8. [HTML] Smart water grids and digital twin for the management of system efficiency in water distribution networks HM Ramos, A Kuriqi, M Besharat, E Creaco,
9. Water supply and water scarcity VA Tzanakakis, NV Paranychianakis,
10. Burst detection in water distribution systems: The issue of dataset collection A Menapace, A Zanfei,
11. Smart water management towards future water sustainable networks HM Ramos, A McNabola,
12. Li, Jiada, Xiafei Yang, and Robert Sitzenfrei. "Rethinking the framework of smart water system: A review." *Water* 12.2 (2020): 412.
13. Wang, Xiying. "The artificial intelligence-based agricultural field irrigation warning system using GA-BP neural network under smart agriculture." *PloS one* 20.1 (2025): e0317277.
14. Agudelo-Vera, Claudia, et al. "Drinking water temperature around the globe: understanding, policies, challenges and opportunities." *Water* 12.4 (2020): 1049.
15. Alemayehu, Sintayehu, et al. "Harnessing Livestock Water and Pasture Monitoring and Early Warning Systems for Anticipatory Action to Strengthen Resilience of Pastoral Communities in Ethiopia: A Qualitative Multi-Stakeholder Analysis." *Sustainability* 17.10 (2025): 4350.